DT

DT12N/P,32N/NV/P/PV

Compact and slim gauges

- Excellent resistance to workshop conditions (DT12P, DT32P/PV : IP64)
- Resistant to oil, water, dust, vibration, and shock. ● Accuracy : 10μm
- Resolution : 5μm ● Measuring range : 12mm/ 0.47", 32mm/1.26"
- Compact size ideal for designing into machines
  DT12 : 12(D) x 35(W) x 116(H)mm/ 0.47" x 1.38" x 4.57"
  DT32 : 12(D) x 35(W) x 218(H)mm/ 0.47" x 1.38" x 8.58"
- Pneumatic push type are also available ● Guaranteed number of strokes : 5million
- Main applications : Automatic sorting of parts

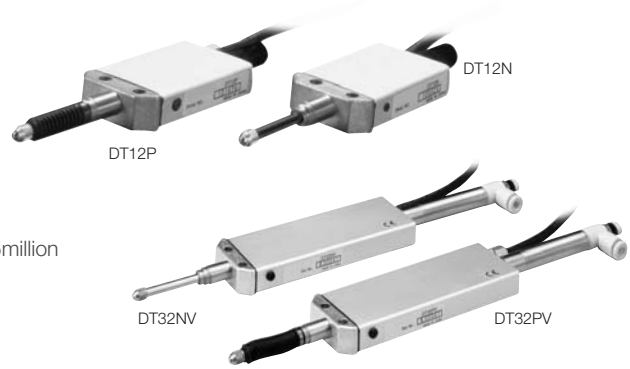

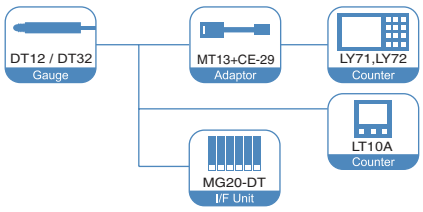

Digital Gauge

Dimensions

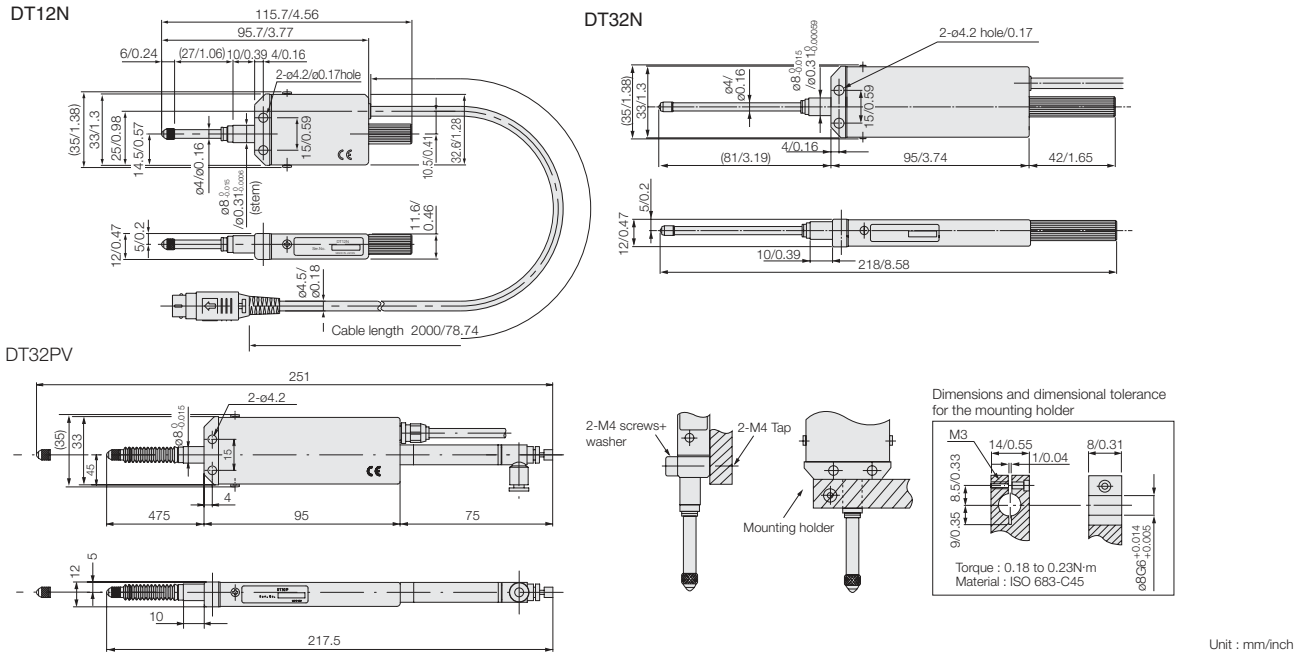

Unit : mm/inch

Specifications

Model		DT12N	DT12P	DT32N	DT32NV	DT32P	DT32PV
Spindle actuation		—			Pneumatic push type	—	Pneumatic push type
Measuring range		12 mm/ 0.47"		32 mm/ 1.26"			
Resolution		5 μm					
Measuring range force	Upward	0.7 ± 0.5 N	All direction: 1.7 N or less	1.1 ± 0.8 N		All direction: 2.9 N or less	All direction: *2 9 N or less
	Lateral	0.8 ± 0.5 N		1.3 ± 0.8 N			
	Downward	0.9 ± 0.5 N		1.5 ± 0.8 N			
Accuracy (at 20˚C / 68˚F)		10 μm					
Operating temperature		0 ˚C to 50 ˚C / 32 ˚F to 122 ˚F (gauge)					
Storage temperature		-10 ˚C to 60 ˚C / 14 ˚F to 140 ˚F					
Cable length		2 m/ 6.56"					
Mounting stem diameter		ø $8^{0}_{-0.015}$ mm/ ø $0.31"^{0}_{-0.00059}$					
Feeler		Feeler tipped with ø 3 mm/ ø 0.12" dia. Carbide ball with M2.5p x 0.45 screw on fitting end (DZ-123)					
Mass*1		Approx.75 g/ 2.65 oz	Approx.80 g/ 2.82 oz	Approx.120 g/ 4.23 oz	Approx.140 g/ 4.94 oz	Approx.120 g/ 4.23 oz	Approx.140 g/ 4.94 oz
Protective design grade		—	Equivalent to IP64	—		Equivalent to IP64	
Guaranteed number of strokes		5 million					

*1 excl. cable unit and Interpolator unit.
*2 Measuring force with air pressure of 1.96 x 10^5 Pa and speed control is open.
*3 Measuring force with air pressure of 2.35 x 10^5 Pa and speed control is open.